DWG NO	SH	REV

REVISIONS

ZONE	REV	FINISHES:	GAUGE:
		BP	13ga. .090

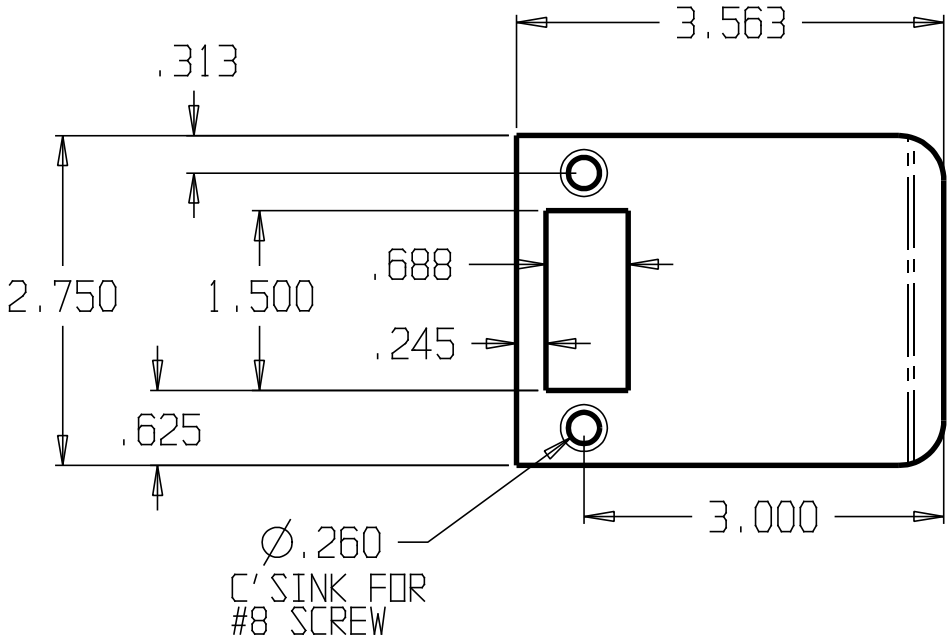

DON-JO MFG. INC.		SIZE	DATE:	PART NO.	REV
DESIGNER		A	5/13/04	EL-203	
APPROVED		SCALE	RELEASE DATE	WEIGHT	SHEET