605,613,619,620,626

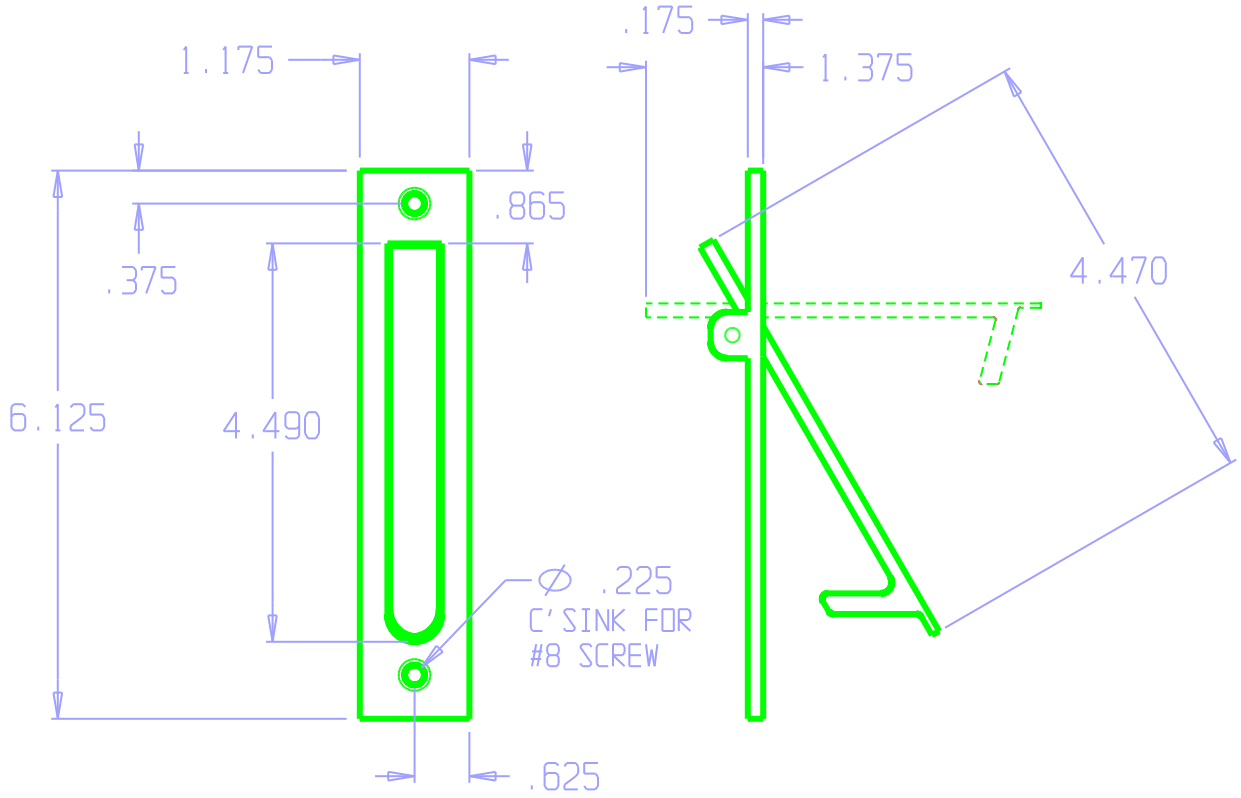

DON-JO MFG. INC.

A	2/10/04	#106	